GE
Sensing & Inspection Technologies

Aurora Moisture Analyzer

Moisture Measurement for Natural Gas in a New Light

GE's Aurora analyzer uses tunable diode laser absorption spectroscopy (TDLAS) to measure moisture in natural gas rapidly and accurately. The analyzer is suitable for installation in hazardous areas and operates over a wide range of environmental conditions. Aurora's fast response quickly alerts and documents when moisture concentrations are out of compliance. Once process upsets are corrected and the gas dries out, the fast response enables natural gas to be cleared for entry into the "energy grid."

GE's experience in moisture measurement includes aluminum oxide, polymer capacitance and chilled mirror sensors. GE's heritage also includes the development of the first injection diode laser in 1962 by Dr. Robert Hall in Schenectady, NY. The compact and inexpensive diode laser made it possible for compact discs, laser printers and fiber optic telecommunications. The new Aurora TDLAS hygrometer enables natural gas processing and transportation facilities to monitor moisture content in real time with high precision and reliability.

Features and Benefits

- Optical response: <2 seconds
- No cross sensitivity to glycols or other contaminants
- Direct readout in lbs/mmscf, mg/m^3, dew point or ppm$_v$
- Turnkey sampling system for measurement integrity
- "Through-the-glass" programming with magnetic stylus. No "hot permit" needed.
- Hazardous area certifications: cFMus Class I, Div 1, Groups C and D, ATEX & IECEx Ex de IIB T6
- Three programmable 4-20mA signals—monitor gas quality 24X7
- Two digital RS 485/232 ports with MODBUS RTU— direct connection to digital SCADA systems
- Supplied with AuroraView software— enables remote readout, trend graphing and diagnostics
- Reliable—designed for five years of continuous service before first factory service

Theory of Operation

The Aurora TDLAS hygrometer for natural gas is a system designed to continuously monitor the moisture content in natural gas. It fundamentally measures the partial pressure of water vapor (water in the gas state). With the simultaneous measurement of pressure and temperature, the Aurora provides all of the commonly used moisture units, including:

- Volume ratio in parts per million by volume (ppm$_v$)
- Absolute humidity in lbs per million standard cubic feet (lbs/mmscf) or milligrams per cubic meter (mg/m^3)
- Dew point temperature in °C or °F
- Pressure dew point in °C or °F

The fundamental water vapor pressure measurement is based on the Beer-Lambert Law:

$$A = ln\left(\frac{I_0}{I}\right) = SLN$$

A = Absorbance
Io = Incident light intensity
I = Light intensity transmitted through sample gas
S = Absorption coefficient*
L = Absorption path length (a constant)
N = Concentration of water vapor (directly related to the ratio of the partial pressure of water and the total pressure)

*The absorption coefficient is a constant for a specific gas composition at a given pressure and temperature.

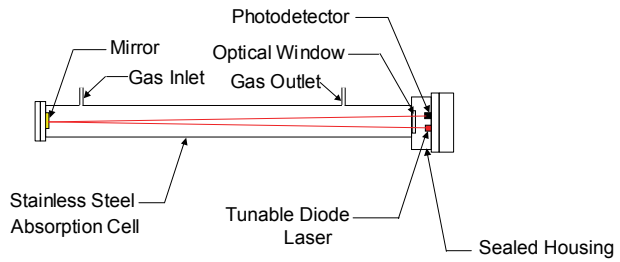

Cross-section of absorption cell

At certain specific frequencies the water molecule will absorb light energy, while at other frequencies the gas is practically transparent. At a given absorbing frequency, as the concentration of water vapor increases, the absorption also increases. Aurora utilizes a diode laser that is swept through a narrow frequency band in the near infrared spectrum. The laser is also modulated at high frequency. By measuring the laser light intensity with a photodetector, the Aurora is able to provide direct measurement of the partial pressure of water by correlation of laser light lost to the incident light. The light loss or absorption signal is reduced by looking at the second harmonic signal known as the 2F signal. The magnitude of the 2F signal is related to the partial pressure of water. The partial pressure divided by the total pressure and multiplied by 10^6 yields ppmv (parts per million by volume).

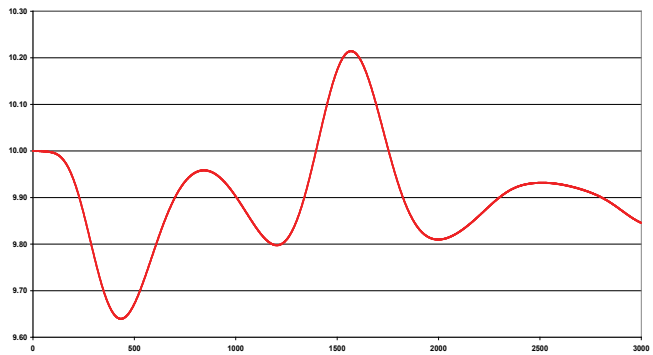

The location of the peak on the X-axis confirms the identity of water. The y-axis is related to the partial pressure of water and therefore the concentration. The system is equipped with AuroraView software, which enables users to capture the absorption spectrum and export it to other application programs such as Excel™.

The laser light is transmitted through an optical window made of proprietary material and is reflected off a gold plated mirror, then returned through the window where it is measured with a photodetector. Since only light comes in contact with the process gas and all of the wetted components are made of inert materials, this technology does not exhibit the drift associated with sensor-based hygrometers.

The Aurora is equipped with magnetic induction keys that enable "through-the-glass" programming. The unit may be operated in a hazardous area without the requirement for a "hot permit."

The laser power supply, controller and digital signal conditioning circuitry are assembled in an explosion-proof/flameproof enclosure. A backlit three-parameter LCD provides direct readout of user-programmable parameters as well as indication of system status. The laser diode is housed in a sealed enclosure. Aurora utilizes magnetic induction keys; therefore, users may program the Aurora by use of a magnetic stylus, eliminating the need for a "hot permit."

The complete system is certified for use in hazardous areas. Aurora provides very fast response. Once the sample cell is purged, the system responds in a matter of seconds.

The Aurora is equipped with three programmable analog outputs (0/4-20 mA) and two digital ports (RS485/232) with MODBUS RTU. The unit is also equipped with an auxiliary 4-20 mA input channel for connection to a process pressure transmitter. The unit is ideal for connection to data acquisition systems or SCADA systems for long-term monitoring of natural gas quality.

Aurora is equipped with a two-stage turnkey sampling system. An optional first stage consists of a membrane filter/regulator installed directly in the pipeline. It prevents any liquid (hydrocarbon, glycol or water in liquid phase) from entering the sample line. The pipeline pressure is reduced by means of a regulator. As the gas enters the second stage it flows through a coalescing filter, and a pressure regulator further reduces the pressure. The flow rate is adjusted with a needle valve. Only clean low-pressure gas enters the absorption cell. An optional heater may be installed in the enclosure for application in cold climates. The heater also serves to keep the sample in the gas phase.

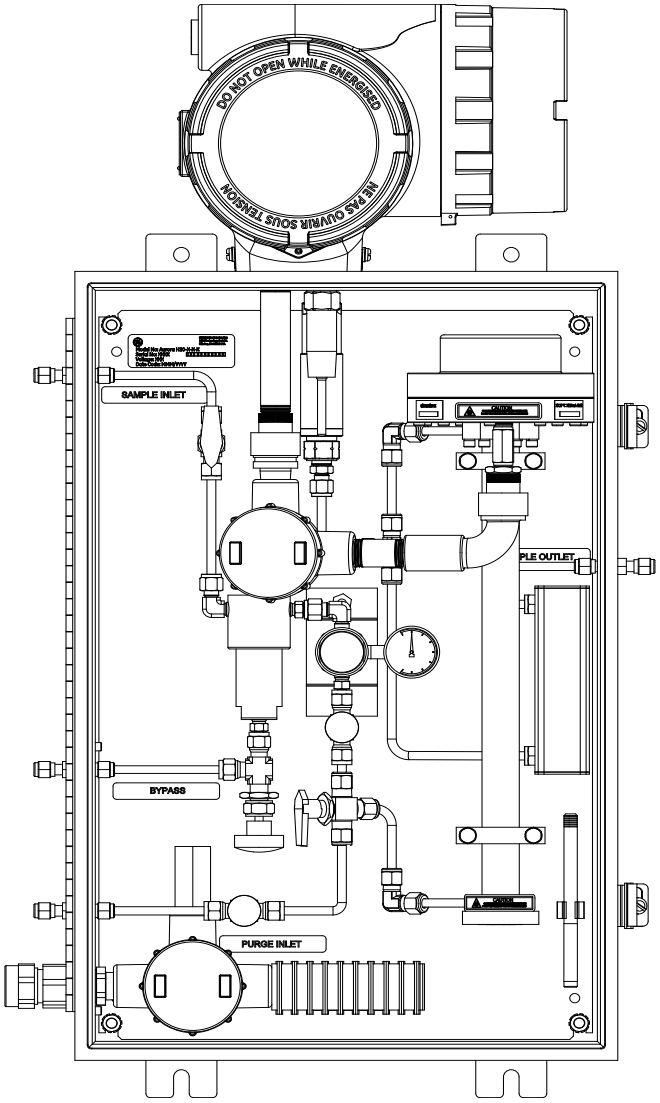

Sampling system—US and Canada

The laser-based measurement system provides very fast response. The optical response is <2 seconds. This system has the ability to instantaneously detect moisture process upsets in natural gas dehydration systems. Once the corrective action is applied, Aurora provides the fastest response to ensure that natural gas meets contractual and tariff requirements.

Only low-power laser light comes in contact with the natural gas sample. There are no wetted sensing surfaces as with other moisture measurement technologies. All of the wetted sample system components and the absorption cell are constructed of high quality non-corrosive materials. The system is designed to operate continuously for many years with unsurpassed reliability. Factory service or calibration is recommended on a five-year interval.

Each Aurora unit is calibrated against a NIST (or other national metrological institute) traceable moisture generator and reference hygrometer. A certificate of calibration with functional test data is supplied. Each unit is calibrated by using nitrogen as the background gas, then verified by using methane background gas. This innovation enables users to verify the Aurora using nitrogen with a known concentration of water.

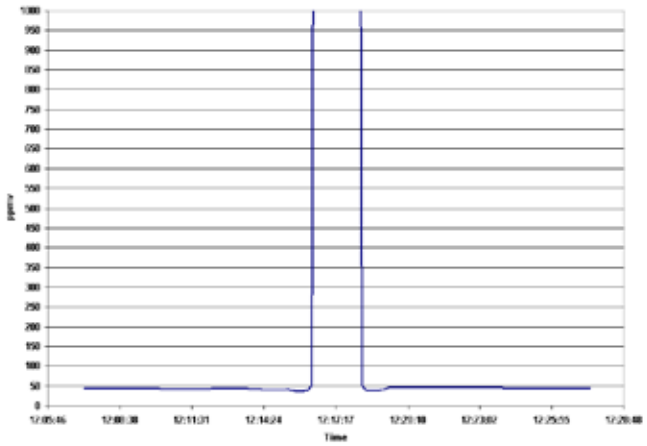

Example of Aurora's response time after a process upset. Water was injected into a sample of natural gas that had a concentration of 50 ppmv. Within a few seconds the Aurora indicated the increase. The Aurora recovered back to 50 ppmv within three minutes.

AuroraView PC Software

The system is supplied with AuroraView software, a utility that enables the Aurora to interface to a remote personal computer. AuroraView enables remote readout of user-selected parameters, trend graphing, diagnostics and the capture of the spectral scan. Trend data and spectral scans can be saved as ASCII text files, facilitating the ability to export and share the data in other application software such as Excel™.

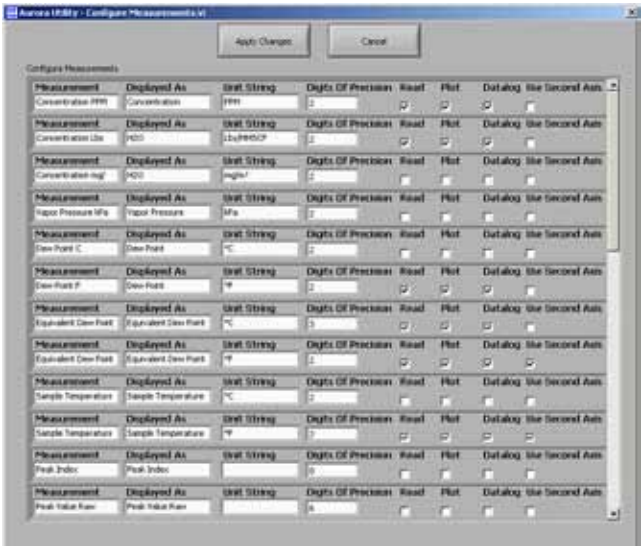

AuroraView has intuitive pull-down menus for setting up the parameters to be displayed, graphed and data logged.

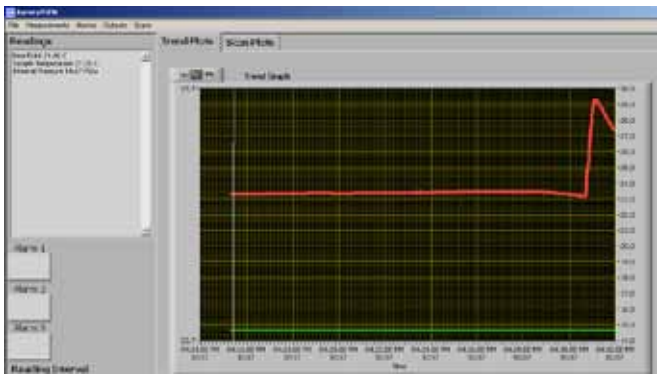

AuroraView software displays direct readings of moisture, temperature and pressure, as well as trend graphs. The data trends can be exported as ASCII text and opened in spreadsheet programs such as Excel™.

Dimensions

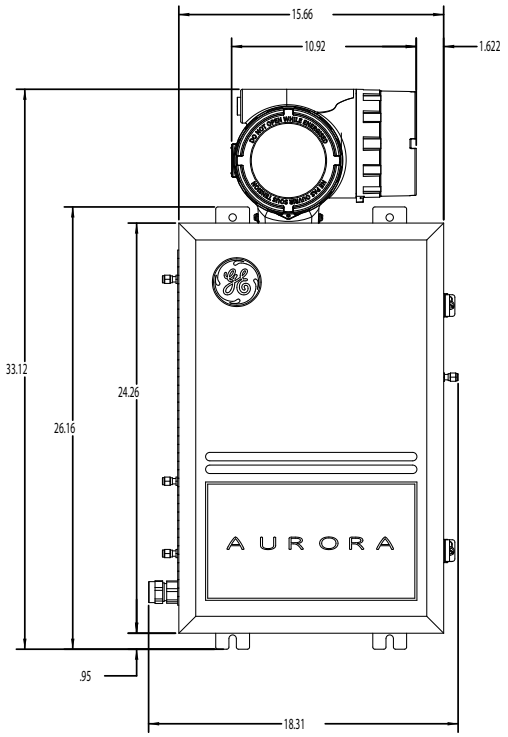

Front view

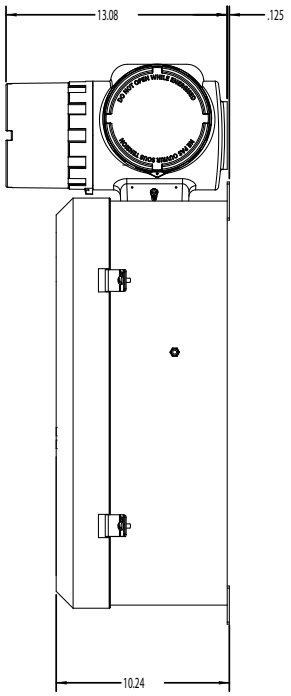

Side view

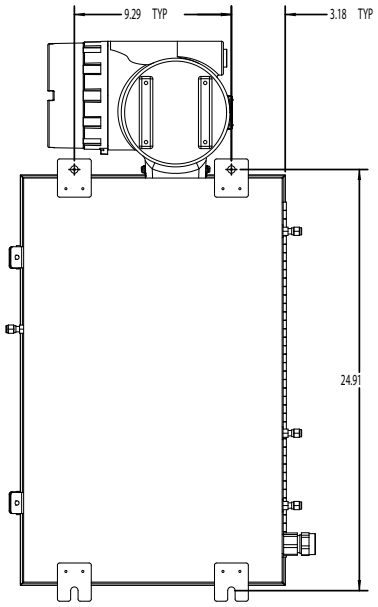

Specifications

Power

Analyzer
100-240 VAC, 50-60 Hz, 10 W
18-32 VDC (24 VDC nominal), 10 W
Optional Electrical Heater
120 VAC, 120 W
230 VAC, 75 W

Range

Parts Per Million by Volume
5 to 5000 ppm_v
Dew/Frost Point[1]
-65.5° to –2.6°C frost point
Dew/Frost Point[1]
-85.9° to 27.3°F frost point
Process Dew/Frost Point[1]
Process or equivalent dew point/frost point by calculation with process pressure signal (4-20 mA) or constant
Absolute Humidity
3.8 to 3,803 mg/m^3
Absolute Humidity
0.24 to 237 lbs/MMSCF

[1] *Readings below 0°C (32°F) are in "frost point," temperature and above 0°C (32°F) are in "dew point" temperature.*

Accuracy

Parts Per Million by Volume
±2% of reading or 4 ppmv
(Accuracy of other parameters derived from ppmv.)

Response Time

Optical response
<2 seconds
System response
The system response is dependent on the length of sample tubing, sample system components, flow rate and pressure, as well as the change in moisture concentration.

Operating Pressure

Operating sample cell pressure
69 to 172 Kpa (10 to 25 psia)
Maximum Pressure
1380 KPa (200 psi)
Process Pressure
10,342 KPa (1500 psig) maximum[2]

[2] *Higher pressure available with application of additional sampling system components.*

Temperature

Operating
-20 to 65°C (-4 to 149°F)
Storage
-20 to 70°C (-4 to 158°F)
Optional Heater/Thermostat Set Point
25°C (77°F)

Flowrate

Sample Cell Flowrate
10 to 60 SLH (0.4 to 2 SCFH); 30 SLH (1 SCFH) nominal
Coalescer By-pass Fast Loop
5 to 10X of flowrate through sample cell

Display

Backlit LCD. Three programable simultaneous parameters. Alphanumeric status and diagnostic display. LEDs for power, laser temperature stability, keypad lockout.

I/O

Analog Outputs
Three programmable 0/4-20 mA; 500 Ohm max load
Analog Input
Loop powered 4-20 mA input for remote pressure transmitter. Aurora supplies 24 VDC.
Digital Interface
Two programmable digital communications ports RS232, RS485 with multidrop capability and assignable address, MODBUS RTU protocol

Enclosure

Ingress Protection
IP-66

Laser

Class 1 product. Conforms to IEC 60825-1. Edition 2.0 Safety of Laser Products

Warning! Use of controls or adjustments or performance of procedures other than those specified herein may result in hazardous laser exposure.

User Interface

Programmable “through-the-glass” via magnetic stylus

Net Weight

37 Kg (100 lb)

Hazardous Area Certification

USA/Canada

Explosion-proof for Class I, Division 1, Groups C&D

EU and Elsewhere

ATEX and IEC Ex:
Ex de IIB T6 -20°C to +65°C
Flameproof with increased safety compartment

European Certification

CE

Complies with EMC Directive 2004/108/EC, Low Voltage Directive 2006/95/EC and Pressure Directive 97/25/EC for DN/25

Calibration

Recommended Factory Verification/Service

Five years

www.gesensinginspection.com

920-468A

© 2009 General Electric Company. All Rights Reserved. Specifications are subject to change without notice. GE is a registered trademark of General Electric Company. Other company or product names mentioned in this document may be trademarks or registered trademarks of their respective companies, which are not affiliated with GE.

Instructions: Please fill out the fields in color. Any field with a block is a required field.

Today's Date:

GE Sensing Moisture Application Data Sheet

Contact Information

Name:		Phone:	
Company:		Fax:	
Address:		E-mail:	
Installation Address:		Delivery Want	
Account Manager/Sales rep (if known)			

Material & Installation Data

Tag Number(s):

Material Name

Physical State of Material ☐ Gas ☐ Liquid

Complete Chemical Composition		Component Name	Chemical Formula	Weight Percent		Tolerance (Estimate if necessary)	
Component A				Nominal	%	+/-	%
Component B				Nominal	%	+/-	%
Component C				Nominal	%	+/-	%
Component D				Nominal	%	+/-	%
Component E				Nominal	%	+/-	%
Component F				Nominal	%	+/-	%
Other *				Nominal	%	+/-	%
				☐Total**	100%		

*Attach additional pages if more space is needed

**Total percentage must be as close to 100% as possible

Possible contaminants: Concentration:

Name & Concentration of acid gases present (CO2, H2S, Nox, SO2, etc.):

Type of monitoring: ☐ Spot Sample ☐ Continuous

Process pressure:	Units:		Minumum:		Maximun:		Nominal:	
Process temperature:	Units:		Minumum:		Maximun:		Nominal:	
Flow rate:	Units:		Minumum:		Maximun:		Nominal:	

Diameter of pipe at sample point:

Sample outlet: ☐ Vent to atmosphere ☐ Return to process

If sample will be returned to process, please define the pressure at sample return point:

Units: Minimum: Maximum: Nominal:

Special requirements:

Moisture Measurement Parameters

Please supply the following data for each sample point

Measurement Units: ☐ Dewpoint ☐ ppm v (gas) ☐ ppb v (gas) ☐ *ppm w (liquid)*

# of Measurement Points:

Moisture content range: Units: Minimum: Maximum: Nominal:

Utilities available: ☐ AC Power: VAC Hz

☐ DC Power: V

☐ Compressed air pressure: ☐ Cooling water temperature:

☐ Steam: pressure: ☐ Other:

Area classification: ☐ Nonhazardous ☐ Hazardous

If hazardous: Class: Division: Groups:

Location: ☐ Indoors ☐ Outdoors

Ambient temperature: Units: Minimum: Maximum: Nominal:

Cable distance required from analyzer to moisture sensor: ☐ feet ☐ meters (select one)

Special requirements:

Analyzer Electronic Requirements

Electronics configuration: ☐ 19 inch-rack ☐ Panel ☐ Bench ☐ Weatherproof

☐ Explosionproof ☐ Other (specify)

Output: ☐ 0 to 2 V ☐ 4 to 20 mA ☐ 0 to 20 mA

☐ RS232 ☐ RS485 ☐ Other (specify):

Alarm Contacts: ☐ High/Low ☐ High ☐ None ☐ Other

Utilities available: ☐ AC Power: VAC Hz

☐

	☐ DC Power:		V			
	☐ Compressed air	pressure:			☐ Cooling water	temperature:
	☐ Steam:	pressure:		☐ Other:		
Area classification:	☐ Nonhazardous	☐ Hazardous				
If hazardous:	Class:	Division:	Groups:			
Location:	☐ Indoors	☐ Outdoors				
Ambient temperature:	Units:	Minimum:	Maximum:	Nominal:		
Special requirements:						

Miscellaneous

Sample pressure measurement:	☐ Not required	☐ Required
Sample temperature measurement:	☐ Not required	☐ Required
Tagging:	☐ Not required	☐ Required
Electronic Drawings:	☐ Not required	☐ Required
Hardcopy Drawings:	☐ Not required	☐ Required
Additional manuals:	☐ Not required	☐ Required
Special requirements:		